Simon Rack
SINCE 1964 - MANUFACTURER

SIMONWORK

BASIC 2 90 x 120 x 75 cm

35.4” x 47.2” x 29.5”

15 min

5 Años Garantía / Years Guarantee / Jahre Garantie / Ans Garantie / Anos de Garantia
SIMONRACK

4x 90 cm (35.4”)

4x 120 cm (47.2”)

4x 75 cm (29.5”)

2 x

75 x 120 cm

*MEDIDAS EN USO USED MEASUREMENTS
MASSNAHMEN IM EINSATZ MESURES EN EMPLOI MEDIDAS EM USO:
850 x 1210 x 760 mm (33.5” x 47.6” x 29.9”)

8 435104 983607

ESTANTERIAS SIMON S.L. B.50.556.463
PG. ALFAMEN C/ POLIGONO C, Nº3
ALFAMEN (ZARAGOZA)

www.simonrack.com

www.simonrack.com

PEFC · MADE IN SPAIN European Quality · EPOXY POLIESTER · EMPRESA CERTIFICADA EN SISTEMA DE GESTIÓN DE CALIDAD ISO 9001:2015

Simon Rack
SINCE 1964 - MANUFACTURER

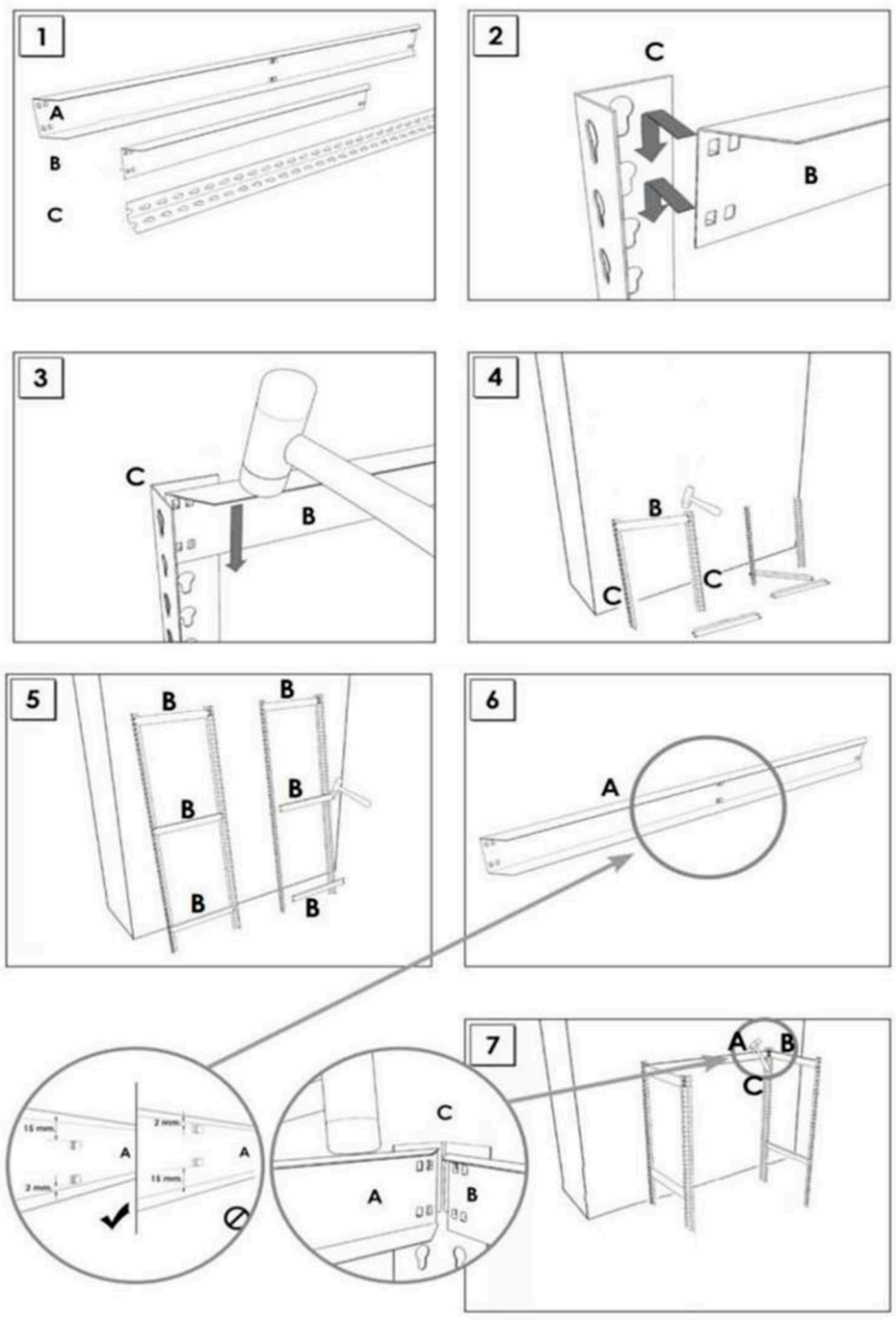

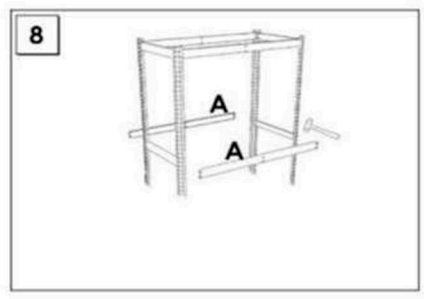

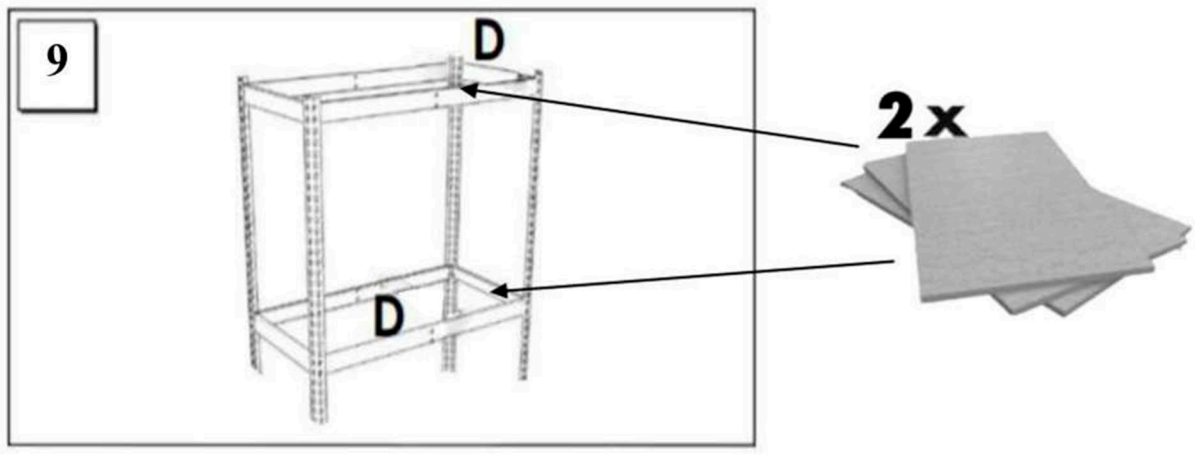

www.instructionsrack.com

www.simonrack.comwww.simonrack.comwww.simonrack.comwww.simonrack.comwww.simonrack.comwww.simonrack.comwww.simonrack.com